cut view
A-A (1 : 10)

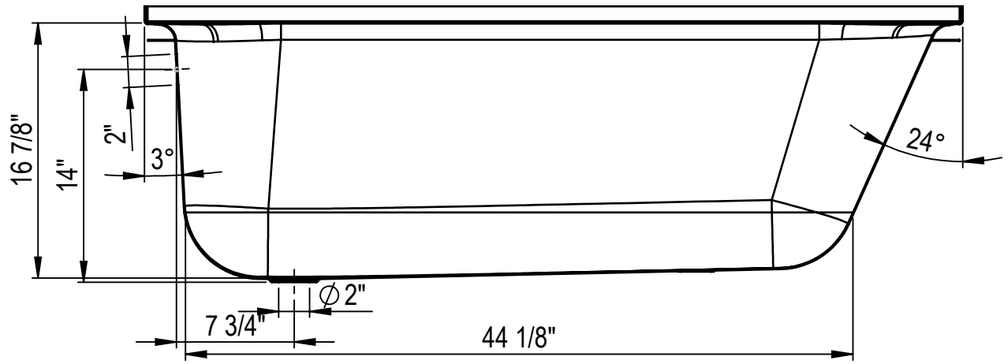

cut view
B-B (1 : 10)

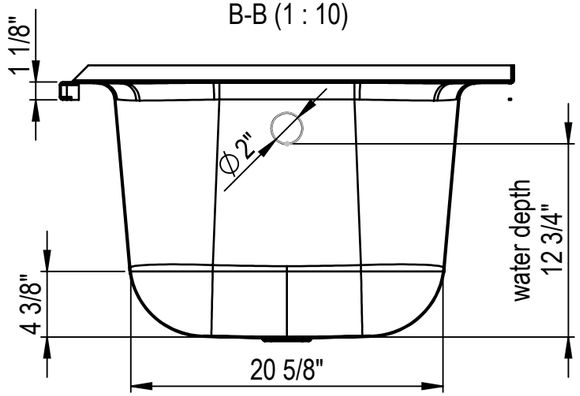

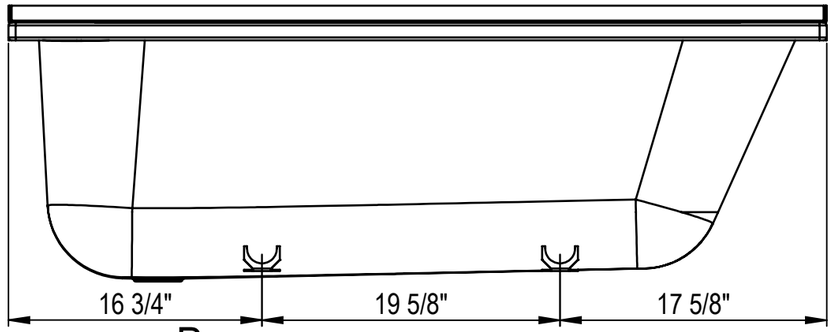

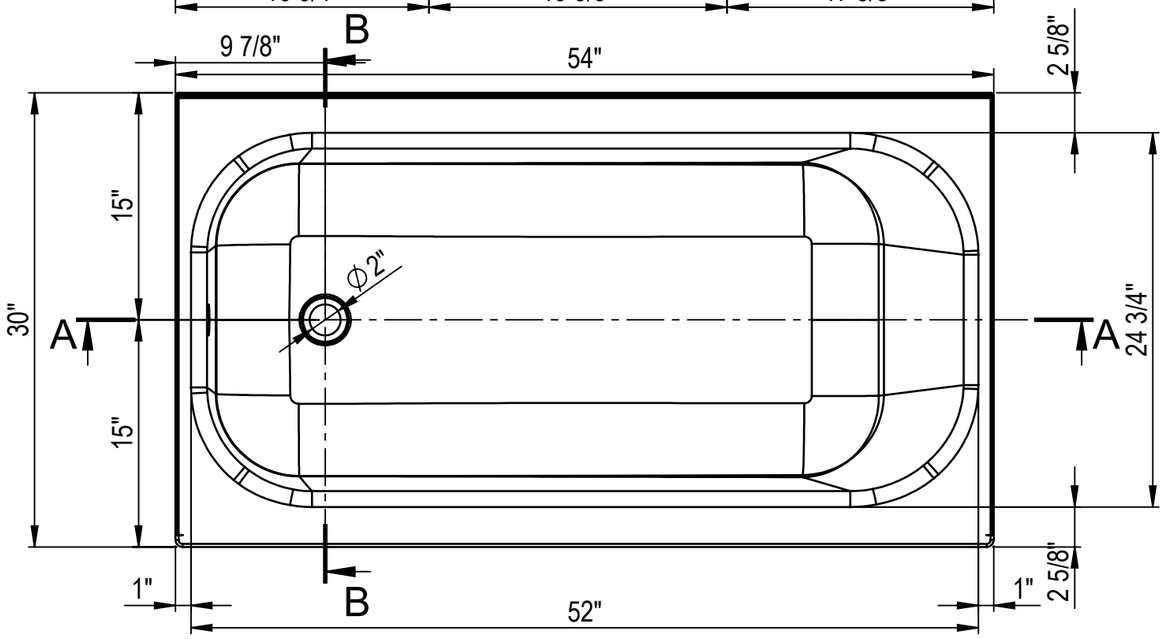

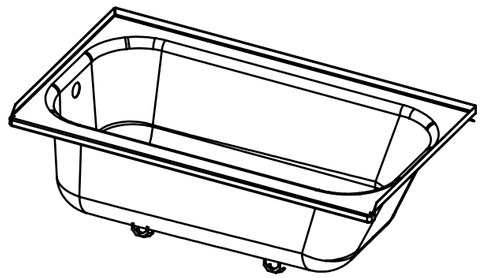

All products are made in the same factory with the same processes.
The steel grade and surface materials are identical.
Dimesional tolerance of ± 1/8".

Change			Change			replaced by	22.03.2024	OM
	-	-		-	-			-
	-	-		-	-			-
	-	-		-	-			

Item no.	2526-0003		Scale		Format	Sheet/Sheets
release			1:20		A	8 / 12
Order no.						

Schmidlin
www.schmidlinusa.com

Schmidlin NORM MINI
54x30", Tile flanges 3 sides, drain left

Drawing no. 01.1.0004939
Version

Plotdatum: 22.04.2025

CAD-System: SolidWorks

We reserves all rights in this document and it's subject matter. The recipient herby acknowledges these rights and assures the use of this document only for the purpose it was delivered. © Wilhelm Schmidlin AG